1 |

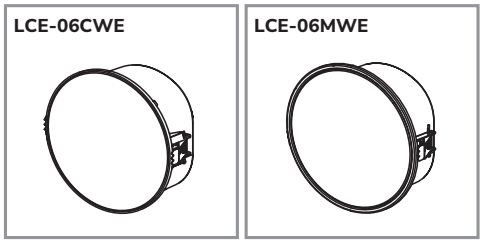
LCE-06CWE
LCE-06MWE

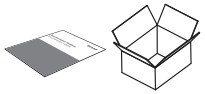

2 |

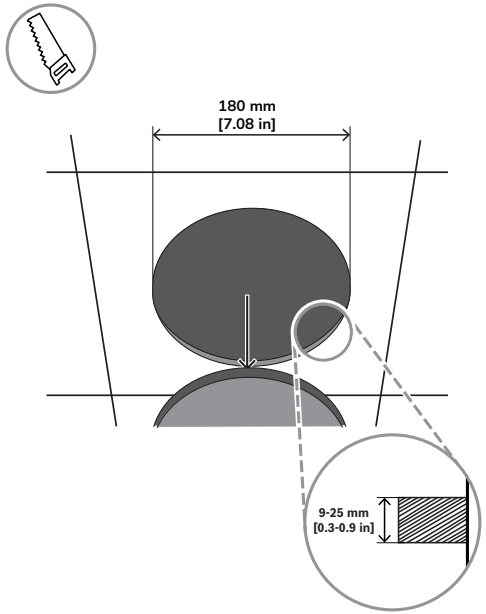
180 mm
[7.08 in]
9-25 mm
[0.3-0.9 in]

3 |

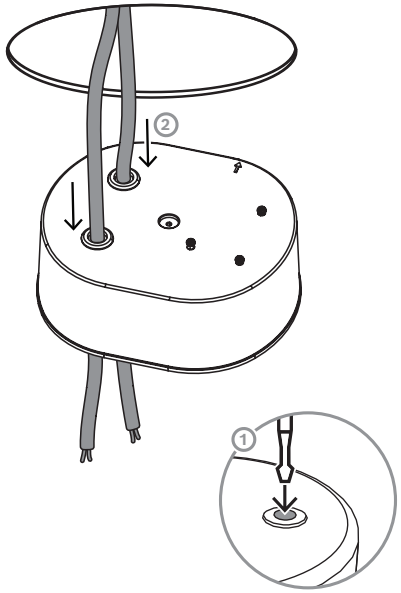
2
1

4 |

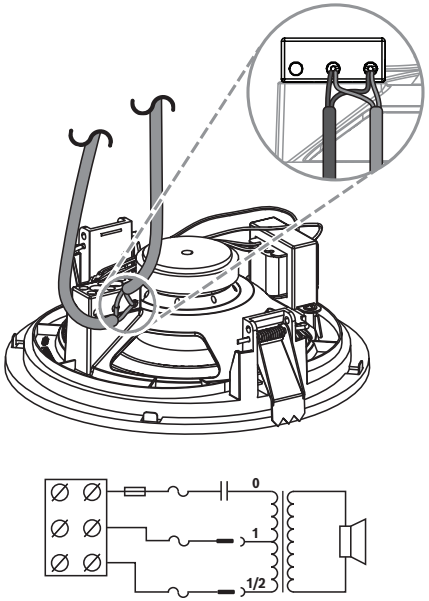
0
1
1/2

5 |

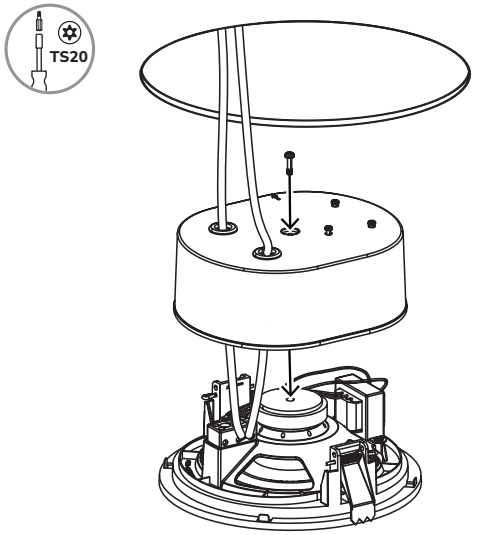
TS20

6 |

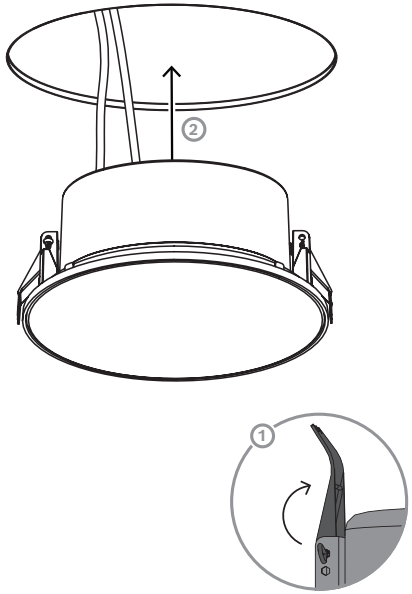
2
1

7 |

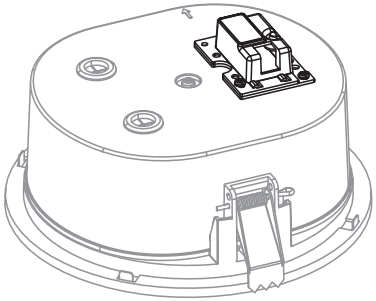

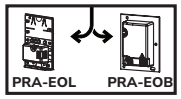
PRA-EOL
PRA-EOB

8 |

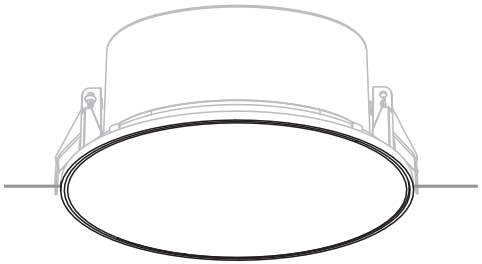

https://commerce.keenfinity.tech/nlexp/en/Loudspeakers/c/3865830155

EN 54-24 DoP Datasheet

CE
1438

Electro Voice Dynacord B.V.
Achtseweg Zuid 173, 5651 GW Eindhoven, The Netherlands
26
1438-CPR-1192

EN 54-24:2008
Loudspeaker for voice alarm systems for fire detection and fire alarm systems for buidings

Ceiling Loudspeakers
LCE-06CWE/LCE-06MWE
Type A

DoP:
LCE-06CWE : LP022934v1
LCE-06MWE : LP022935v1

BOSCH

Ceiling loudspeaker

LCE-06CWE | LCE-06MWE

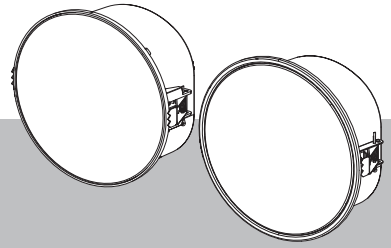

en Quick installation guide

Electro Voice Dynacord B.V.
Achtseweg Zuid 173
5651 GW Eindhoven
The Netherlands
www.keenfinity-group.com
© Electro Voice Dynacord 2026

2026-04 | V02 | Z.01X.003.804 | 202604241117