1 |

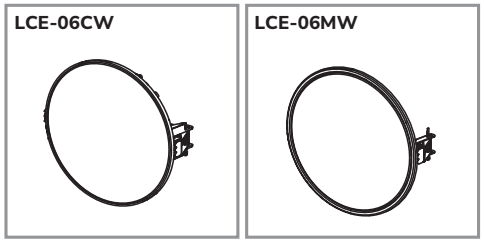

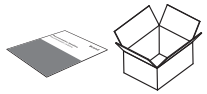

2 |

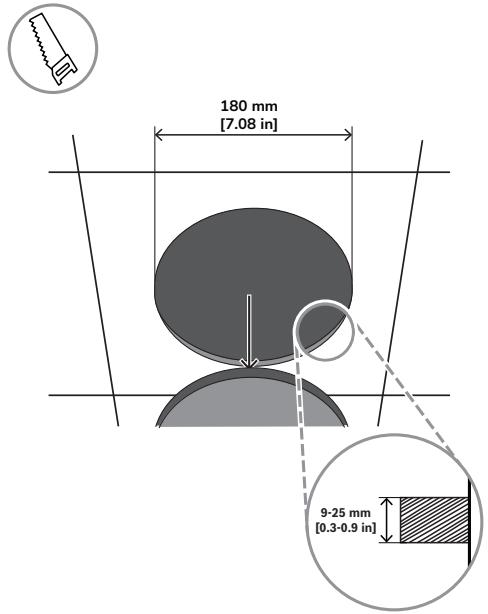

3 |

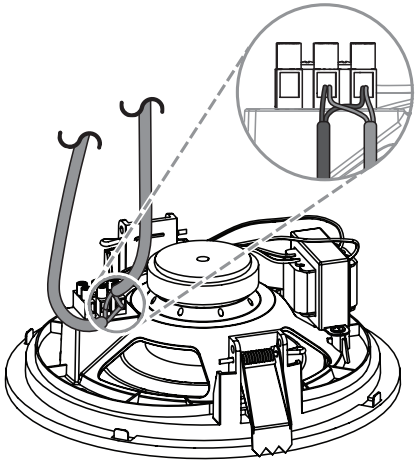

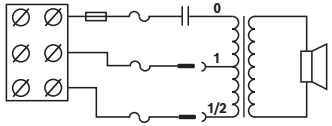

4 |

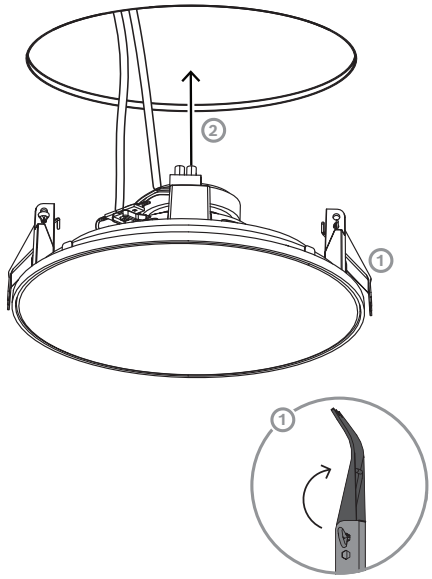

5 |

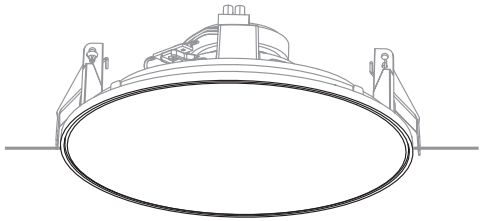

BOSCH

Ceiling loudspeaker

LCE-06CW | LCE-06MW

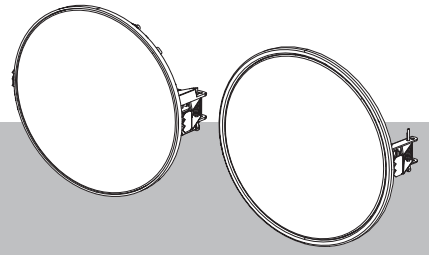

en Quick installation guide

Electro Voice Dynacord B.V.
Achtseweg Zuid 173
5651 GW Eindhoven
Netherlands
www.keenfinity-group.com
© Electro Voice Dynacord 2026

Building solutions for a better life

2026-01 | V02 | Z.01X.003.803 | 202601161522