1 |

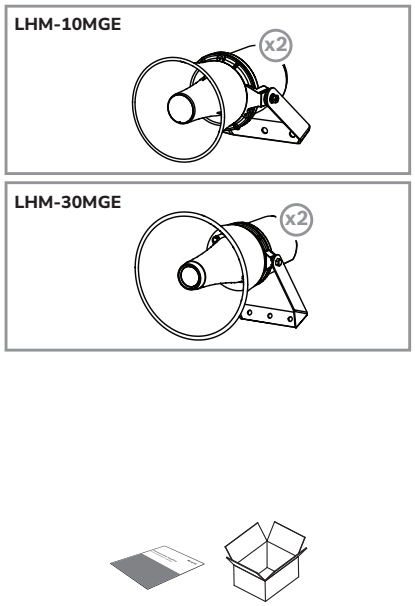
LHM-10MGE
x2
LHM-30MGE
x2

2 |

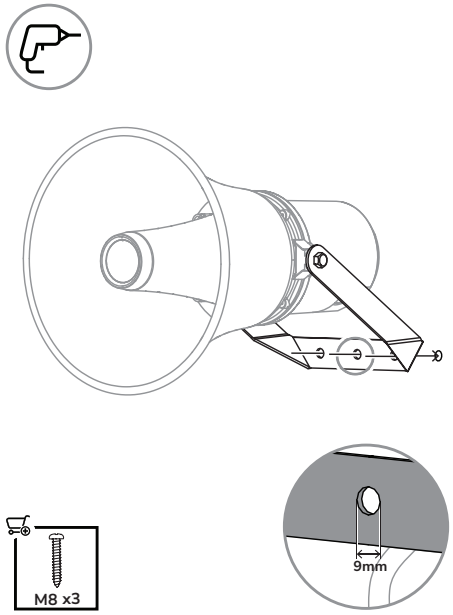
M8 x3
9mm

3 |

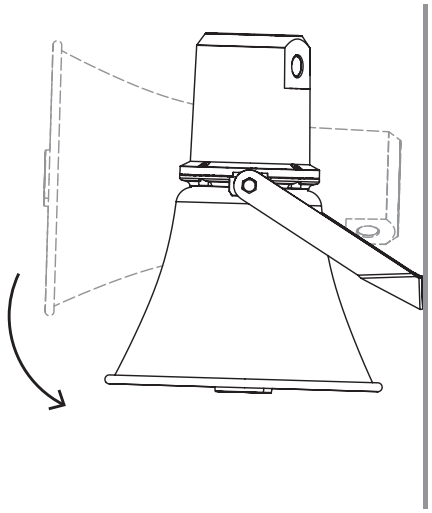

4 |

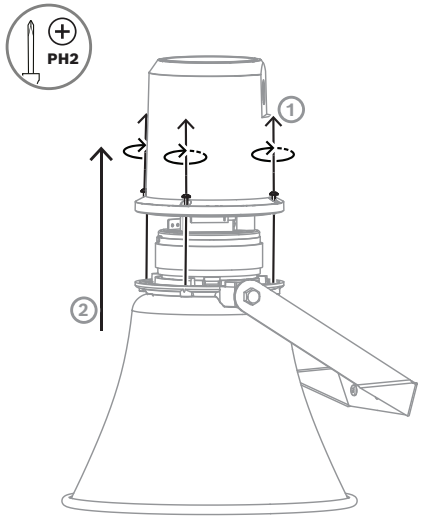
PH2
1
2

5 |

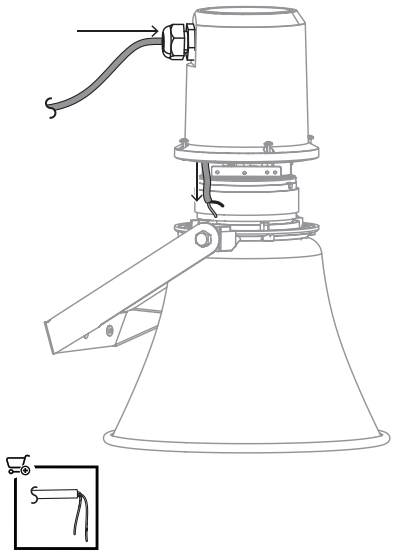

6 |

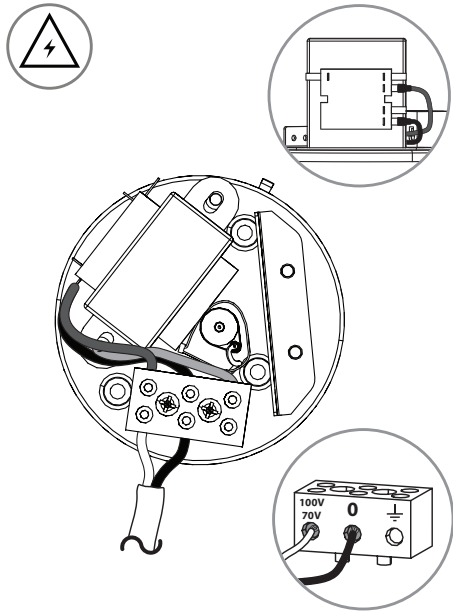
100V
70V
0

7 |

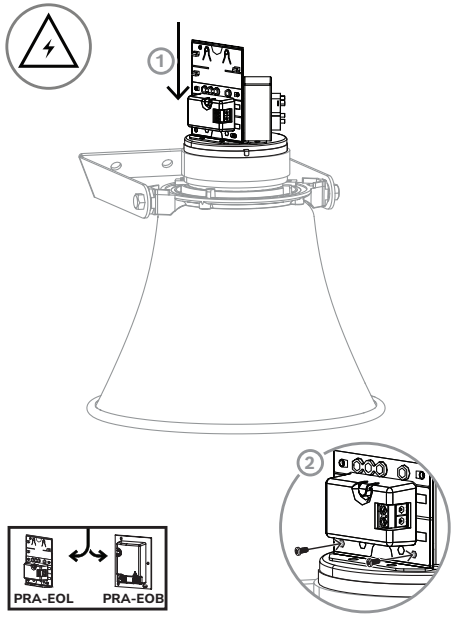
1
2
PRA-EOL
PRA-EOB

8 |

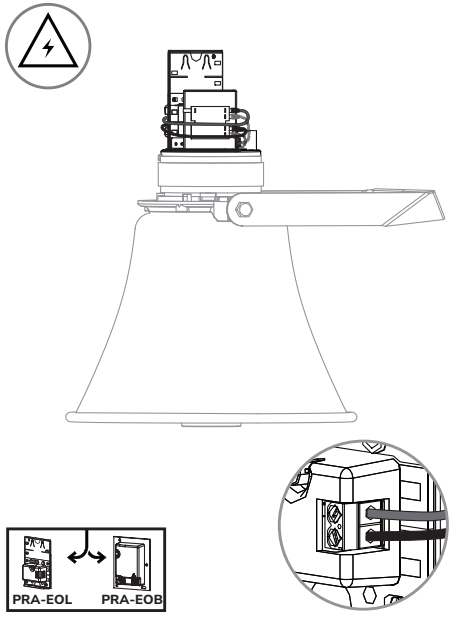
PRA-EOL
PRA-EOB

9 |

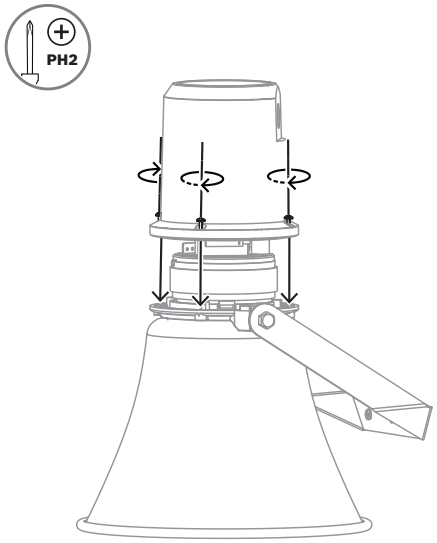

10 |

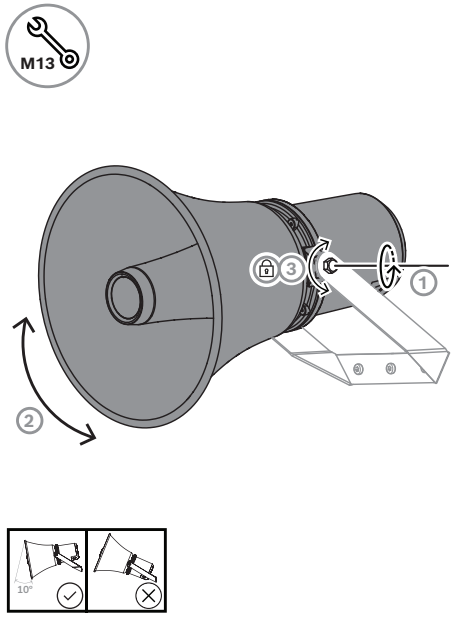

11 |

CE

1438

Electro Voice Dynacord B.V.
Achtseweg Zuid 173, 5651 GW Eindhoven, The Netherlands
26
1438-CPR-1220

EN 54-24:2008

Loudspeaker for voice alarm systems for fire detection and fire alarm systems for buidings

Horn Loudspeakers
LHM-10MGE / LHM-30MGE
Type B

DoP:
LHM-10MGE : LP062934v1
LHM-30MGE : LP062935v1

https://commerce.keenfinity.tech/en/Loudspeakers/c/3865830155?q=::default:8605917441:Horn&text=

EN 54-24 DoP Datasheet

12 |

See Quick Installation Guide F.01U.430.298 for installation and wiring instructions.
Voir le Guide d'installation rapide F.01U.430.298 pour les instructions d'installation et de cablage.

System installation and servicing by qualified personnel only, in accordance with applicable local codes. No user-serviceable parts inside.

DO NOT PAINT
NE PAS PEINTURER

13 |

Warning!
Suspending any object is potentially dangerous and should only be attempted by individuals who have a thorough knowledge of the techniques and regulations of suspending objects overhead. Electro-Voice strongly recommends that loudspeakers be suspended taking into account all current national, federal, state, and local laws and regulations. It is the responsibility of the installer to ensure all loudspeakers are safely installed in accordance with all such requirements. When loudspeakers are suspended, Electro-Voice strongly recommends the system be inspected at least once per year or as laws and regulations require. If any sign of weakness or damage is detected, remedial action should be taken immediately. The user is responsible for making sure the wall, ceiling, or structure is capable of supporting all objects suspended overhead. Any hardware used to suspend a loudspeaker not associated with Electro-Voice is the responsibility of others.

14 |

Safety point
As an added safety measure, it is strongly recommended to utilize a properly rated secondary safety cable (provided by the installer) to securely fasten the speaker from the safety point on its back to a secondary mounting structure on the building.

Old electrical and electronic appliances
Electrical or electronic devices that are no longer serviceable must be collected separately and sent for environmentally compatible recycling (in accordance with the European Waste Electrical and Electronic Equipment Directive).
To dispose of old electrical or electronic devices, you should use the return and collection systems put in place in the country concerned.

BOSCH

Aluminum horn loudspeaker

LHM-10MGE | LHM-30MGE

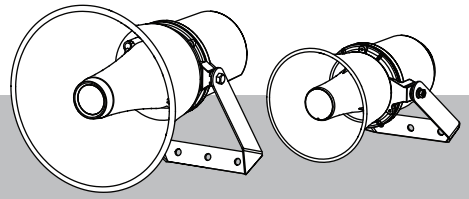

en Quick installation guide

Electro Voice Dynacord B.V.
Achtseweg Zuid 173
5651 GW Eindhoven
The Netherlands
www.keenfinity-group.com
© Electro Voice Dynacord 2026

2026-06 | V01 | F.01U.430.298 | 202606291251