MIC-9803S-Z30B14V PTZ thermal VGA 31° 4MP 30x bl GenAI+

MIC fusion 9100s

- Ruggedized PTZ camera offering metadata fusion with 4MP 30x at 60 fps and a thermal QVGA or VGA images side by side on a single IP address
- Accurate thermal detection and visual identification regardless of lighting conditions in extreme environments (weather, dust/debris/smoke, etc)
- 1/1.8 inch sensor with starlight and HDR X for superior low-light clarity and balanced detail in bright and dark areas without motion artifacts
- Electronic image stabilization (EIS) to reduce the impact of vibrations on the image
- Built on CPP16 for enhanced image processing and encoding, supporting AI-based analytics at the edge
- Highest level of cybersecurity with Secure Element (EAL6+) FIPS 140-3 Level 3 certified

The MIC fusion 9100s camera is an advanced PTZ surveillance platform engineered for governmental security, critical infrastructure protection, mining safety, and large-scale perimeter surveillance in mission-critical environments. It combines a 4MP visible imager with 30x zoom for precise visual identification and a thermal imager for continuous detection under difficult lighting and weather conditions.
By detecting heat signatures and visualizing temperature differences, the camera operates without the need for visible light, making it highly effective in identifying potential threats across large perimeters in total darkness, fog, or mist. When paired with Intelligent Tracking, it delivers continuous surveillance in compromised visibility, using thermal for reliable detection and optical imaging for target confirmation and detail.
The camera's ruggedized design and precision engineering make it exceptionally durable and dependable. It offers the most advanced imaging and positioning system solution available on the market. With its C5-M corrosion rating, it operates even under the most challenging environmental conditions and adverse weather conditions such as high winds, rain, fog, ice, and snow.
Powered by CPP16 platform, the MIC fusion 9100s supports multiple AI-based IVA Pro analytic packs on the device, enabling intelligent detection and analytics at the edge. Together with FIPS 140-3 Level 3 certified cybersecurity and Secure Element (EAL6+) — surpassing TPM (EAL4+), it ensures top-tier data protection and peace of mind through robust durability and leading cybersecurity standards.

Functions

Fusion camera

The MIC fusion 9100s camera combines a high-performance thermal core and a 4MP starlight imager in a single rugged housing, delivering simultaneous thermal and optical video streams. Thermal imaging enables reliable detection of people, vehicles, and drones at long range, even in complete darkness, smoke, or challenging weather conditions. The optical imager provides the visual detail required for accurate identification and verification.

Together, these complementary technologies significantly enhance detection, recognition, and situational awareness for perimeter security, defense, and critical infrastructure applications.
Metadata fusion further extends this capability by sharing detection events between the thermal and visible image streams. Events detected by the thermal imager are presented as metadata overlays in the visible video stream. This ensures that no critical event is missed, even when monitoring only the optical image in challenging conditions, as shown below.

The same scene viewed using metadata from the thermal imager would appear as shown below.

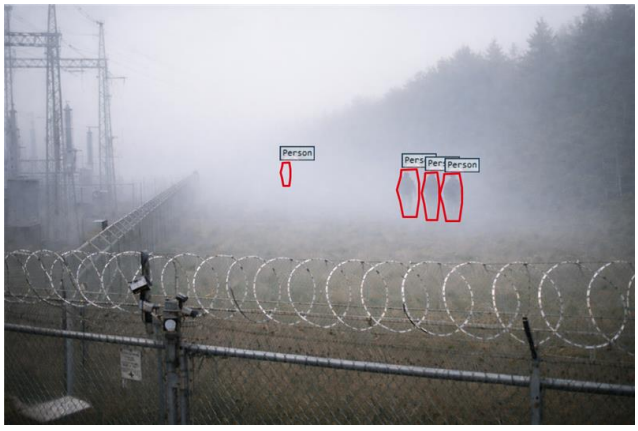

When an alert is received, operators can immediately switch to the thermal stream to clearly visualize the object generating the alarm. Metadata fusion reduces operator workload, removes the need to continuously monitor both streams, and provides faster, more informed responses in environments with limited visibility.

Visible imager
The 4MP visible imager delivers high-quality images with 30x optical zoom for sharp focus and precision across wide and narrow fields of view. Its large 1/1.8-inch sensor provides exceptional sensitivity, superior low-light performance, and excellent color reproduction, even under complex lighting environments. The combination of starlight technology and HDR X (133 dB) ensures clear, detailed images even in low-light and challenging high-contrast scenes, offering outstanding visibility for critical security operations.

Thermal imager
The MIC fusion 9100s camera incorporates uncooled microbolometer / VOx (Vanadium Oxide) to deliver unparalleled thermal imaging. It detects heat signatures emitted by objects, making it effective in outdoor environments where visual light is absent or compromised, such as complete darkness, smoke, and fog. Its ability to visualize subtle temperature differences ensures exceptional situational awareness in even the most challenging conditions. This makes it an ideal solution for critical infrastructure security applications.

High-Speed Tracking with precision positioning
The camera uses a closed-loop control system, linking high accuracy coordinates with every pan/tilt position. This ensures it always knows its pointing direction and returns to its exact position even if moved by extremely high winds.
Its high-speed pan and tilt tracking with a finely-tuned spur-gear drivetrain and brushless motors deliver smooth, accurate motion with virtually no backlash and support continuous operation without much wear and tear. Instead of drifting off target or lagging behind, the MIC fusion 9100s keeps fast-moving subjects locked in view. This precision keeps fast targets centered, which is essential when tracking vehicles, aircraft, or drones over long distances.

With 360° continuous pan, 305° tilt, and rapid speeds of 140°/s (pan and tilt), the MIC fusion 9100s can track targets moving at extreme velocities, such as cars at highway speeds close to the camera or drones making rapid vertical or lateral shifts near restricted areas.
In practice, it can track a car accelerating along a perimeter road without losing focus, and maintain an eye on a drone making rapid climbs or sudden directional changes near critical infrastructure. It delivers trusted tracking performance in harsh weather, high winds, and continuous duty cycles.
This combination of drivetrain precision, speed, and stability enables reliable tracking in real-world security and defense applications, making the MIC fusion 9100s the most advanced imaging positioning solution in its class.

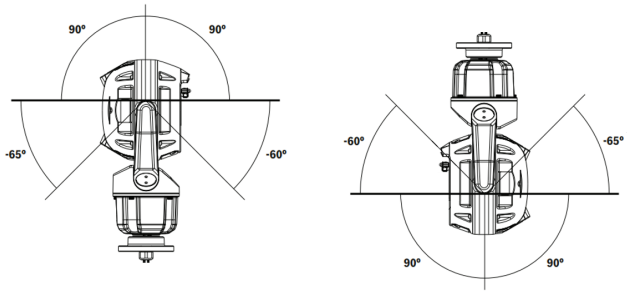

Rugged Environmental Protection
The camera's all-metal housing meets IP66, IP67, IP68, and Type 6P standards for dust and water protection without requiring periodic pressurization maintenance. It is engineered to withstand IK10 impacts, continuous vibration, and high wind loads, and operates reliably from -40 °C to +65 °C (-40 °F to +149 °F). It can be used in extreme environments with rain, dust, snow, flying debris, and other challenging conditions. This enables reliable surveillance monitoring in global locations from cold northern latitudes to hot equatorial and desert regions.

Excellent corrosion protection
The camera benefits from Bosch Automotive domain knowledge in material engineering and coatings. As a result, the superior metallurgy, chromate-based pre-coating, and paint finish of the camera provide unprecedented protection against corrosion. The camera is designed to meet C5-High corrosion resistance requirements, making it suitable for harsh and industrial environments. Reliability is ensured by the camera's ability to withstand a 2000-hour salt atmosphere corrosion resistance test at elevated temperature, in accordance with the ASTM B117 test method.

Window Wiper and Defroster
The camera features a highly durable, silicone wiper which removes moisture from both the glass and germanium windows. In addition, both windows incorporate embedded defrosters that minimize build-up of snow and ice, ensuring the highest-possible image details in extreme cold and moist conditions.
The wiper can also be integrated with third-party washer systems for regular cleaning and maintenance activities.

Multi-spectral illumination
The MIC illuminator accessory (sold separately) has IR LEDs and White light LEDs. The illuminator is field-installable.
The following table identifies the application for each type of LED.

Application	Type of illuminator
Close-range illumination	940 nm IR LEDs
Long-range detection	850 nm IR LEDs
Identification and deterrent	White light LEDs

The MIC camera can steer the IR beam dynamically to match the illumination intensity with the camera's field of view according to the zoom level.
Beam intensity is controlled automatically or manually, depending on user preference. Decreasing intensity reduces overexposure.
White light mode allows operators to capture full scene details in color or use the light as a deterrent effect.

IR Distance measurements, 850 nm

	MIC fusion 9100s (4 MP)
Detection	600 m (1969 ft)
Classification	500 m (1640 ft)
Recognition	400 m (1312 ft)
Identification	200 m (656 ft)

GenAI+
CPP16 is designed to support generative AI at the edge, enabling free-text prompts for alerting and on-device reasoning for custom detections beyond standard analytics. It expands beyond traditional deep-learning detectors to provide contextual understanding and support new use cases using natural language.
This functionality will be available with future firmware releases in 2027.

Intelligent Video Analytics (IVA) Pro
The camera comes with the IVA Pro Buildings and IVA Pro Perimeter pre-installed. Other options can be licensed to optimize the camera analytics for enhanced surveillance capabilities.
The advanced analytics brings highly reliable deep-learning-based detection and tracking of persons and vehicles to scenes ranging from sterile zones to crowded

and congested areas. Resilient against false triggers caused by challenging environmental conditions such as rain, wind-induced movements (such as trees), snow, hail, water reflections, shadows, and insects, the camera ensures accurate and reliable object detection, tracking, and classification. A smart set of alarm and counter rules ensures that you are promptly alerted when predefined alarms are triggered.
Configuration effort is made easy with the camera already classifying objects out of the box. With these advanced features, the camera provides comprehensive security coverage across a wide range of environments and scenarios.

Range performance
Featuring a versatile lens portfolio ranging from telephoto to wide-angle, the MIC fusion 9100s camera easily adapts to a variety of monitoring needs. The detection performance is theoretical, based on the minimal resolution of objects required by Intelligent Video Analytics, and therefore covers only optimal conditions.

Maximum detection range with IVA Pro Perimeter

Lens horizontal field of view	Upright persons (1.8 m x 0.5 m) (5.9 ft x 1.6 ft)	Crawling persons (0.5 m x 0.5 m) (1.6 ft x 1.6 ft)	Frontal vehicle (1.5 m x 1.5 m) (4.9 ft x 4.9 ft)
70°	77 m (253 ft)	46 m (151 ft)	138 m (453 ft)
31°	194 m (637 ft)	116 m (381 ft)	349 m (1145 ft)
12°	250 m (820 ft)	149 m (489 ft)	447 m (1467 ft)
10°	586 m (1923 ft)	327 m (1072 ft)	981 m (3217 ft)

For more information, including the DRI criteria (Detection / Recognition / Identification), commonly known as Johnson's Criteria, refer to the Design Hub.

Intelligent Video Analytics (IVA) Pro - optional licenses
With the introduction of IVA Pro Appearance, users can conduct forensic searches based on distinct characteristics, such as color of clothing, bags, hats, or other features, enabling a more precise search of individuals. Additionally, the camera now features IVA Pro Personal Protective Equipment (PPE), designed to detect the proper use of personal protective equipment, which can reduce accident risk and promote health and safety in various environments.
IVA Pro Traffic can be licensed to optimize the camera analytics for ITS applications such as counting and classification, as well as Automatic Incident Detection, which are necessary for highway and urban infrastructure planning.

Video Analytics while camera is moving
The Intelligent Video Analytics can trigger an alarm when the visible imager detects objects in motion in alarm fields while the camera is moving.
These alarm fields are defined once across all PTZ camera views. Any part of those fields that is currently within the camera's view becomes active. Thus, guard tours sweeping across the monitored areas in order to provide an intruder less time to slip by can now automatically alarm on those intruders as well.
If desired, the alarm can even be used to trigger the camera's Intelligent Tracking feature.

Intelligent Tracking
The newest generation of the Intelligent Tracking feature ensures smoother camera motion for more comfortable viewing and more reliable tracking of objects even under challenging scenes.
When Intelligent Video Analytics application detects objects or individuals, the camera can automatically activate the Intelligent Tracking feature, which controls the pan/tilt/zoom actions of the camera in order to track objects and keep them in view. The Intelligent Tracking can be triggered both by the visible and thermal imager. Areas with potentially interfering background motion (moving trees, pulsating lights, and busy roads) can be masked out.
The camera supports 2 Intelligent Tracking modes:

- Auto mode: In this mode, the camera follows any object that has triggered an alarm in the Intelligent Video Analytics application. This mode is most useful for scenarios where the alarm cases can be clearly defined, for example, when no motion is expected at all.
- Click mode: In this mode, users can click on any object detected by the Intelligent Video Analytics application to enable the camera to track the movement of the selected object. This mode is most useful for scenarios where normal scene activity is expected.

DORI coverage
DORI (Detect, Observe, Recognize, Identify) is a standard system (EN-62676-4) for defining the ability of a person viewing the video to distinguish persons or objects within a covered area. The maximum distance at which a camera can meet these criteria is shown below:

Visible imager

DORI	DORI definition	Distance	Horizontal width
Detect	25 px/m 8 px/ft	91 m / 2794 m 299 ft / 9167 ft	102 m 335 ft
Observe	63 px/m 19 px/ft	36 m / 1109 m 118 ft / 3638 ft	41 m 135 ft
Recognize	125 px/m 38 px/ft	18 m / 559 m 59 ft / 1834 ft	20 m 66 ft

DORI	DORI definition	Distance	Horizontal width
Identify	250 px/m 76 px/ft	9 m / 280 m 30 ft / 919 ft	10 m 33 ft

Intelligent streaming
Smart encoding capabilities, together with Intelligent Dynamic Noise Reduction technology and analytics, make the bandwidth consumption drop to extremely low levels. Only relevant information in the scene, such as motion or objects found with the analytics, are encoded.
The camera is capable of providing 4 streams of thermal video and 4 streams of visible video simultaneously (8 streams total). This allows the camera to deliver independent, configurable streams for live viewing, recording, or remote monitoring via constrained bandwidths.

Image Stabilization
The image quality of a camera can be affected if its mounting is unstable or prone to vibration. The larger the zoom value, the bigger the impact of these vibrations will be, making images unusable and causing fatigue for the user. The camera's image stabilization algorithm uses the built-in gyro sensor to detect continuous vibration and to correct the shaky video in the vertical and horizontal axis. This results in a stable and smooth video on the monitor.
Note: Image stabilization is available on the visible imager only.

Advanced edge recording
Advanced edge recording provides the reliable storage solution possible due to the combination of the following functionalities:

- Dual microSD cards that can be set up as either:
  - Mirrored, for redundant storage
  - Failover, for extended service intervals
  - Extended, for maximum retention time
- Industrial microSD card support allows for extreme lifetime
- Health monitoring on industrial microSD card (slot 1) provides early service indication

Pre-position and Guard Tour
The camera supports 256 pre-positions and two styles of Guard Tours: Preset and Record/Playback. One preset tour has capability for up to 256 consecutive pre-positions and the other with up to 256 user-defined pre-positions. Both offer configurable dwell time between pre-positions.
The camera also provides support for two custom recorded tours, which have a combined duration of 30 minutes of movements. The custom tours are recorded macros of an operator's movements, including pan, tilt, zoom, focus and pre-position activities. Operators can play back tours in a continuous manner.

Regulatory information

Type	Standard
Emissions	EN 55032 class A FCC: 47 CFR Part 15 B, class A RCM: AS/NZS CISPR 32
Immunity	EN 50130-4 EN 50121-4
Environmental	IEC 60068-2-1 IEC 60068-2-2 IEC 60068-2-6 IEC 60068-2-27 IEC 60068-2-30
Safety	CAN/CSA C22.2 No. 62368-1-19, Ed. 3 EN 62368-1 UL 62368-1
Image performance	IEC 62676-5
HD	SMPTE 296M-2001 (Resolution: 1280x720) SMPTE 274M-2008 (Resolution: 1920x1080)
Color representation	ITU-R BT.709-6
ONVIF conformance	EN 50132-5-2 EN 62676-2
Impact protection	EN 62262
Water/dust protection	EN 60529 (IP66/IP67/IP68) UL50E (Type 6P)
Marks	UL, CE, WEEE, RCM, FCC, RoHS, VCCI, CMIM
Cybersecurity	IEC 62443-1-1, IEC 62443-2, FIPS 140-3 Level 3
Compliance	NDAA and TAA compliant
Military standard test methods	MIL-STD-810H 501.7 High Temperature; MIL-STD-810H 502.7 Low Temperature; MIL-STD-810H 505.7 Solar Radiation procedure 1; MIL-STD-810H 506.6 Procedure I - Wind Driven Rain; MIL-STD-810H 509.7 Salt Fog; MIL-STD-810H 510.7 Dust & Sand; MIL-STD-167-1A Vibrations

Region	Regulatory compliance/quality marks	
Global	IEC 62443	DK-174558-UL

Installation/configuration notes

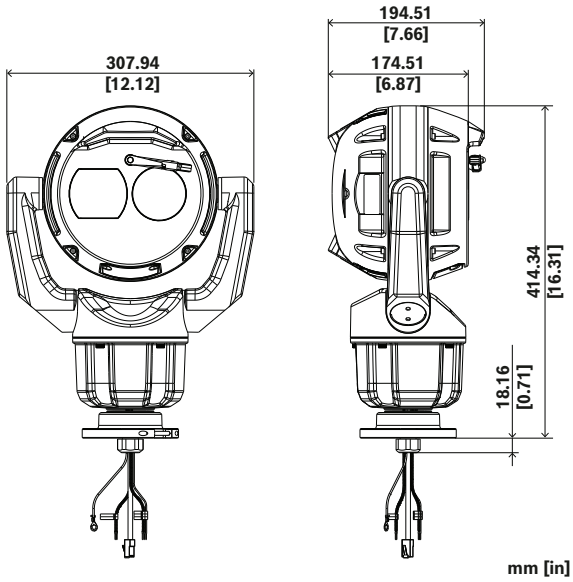

Dimensions in mm (inch)
In the table below, an "X" identifies the power source options for MIC 9100s camera models.

	PoE bt Type 4, Class 8	36 VDC	24 VAC
Camera only	X	X	X
Camera with illuminator attached		X	X

Please note when used with illuminator accessory, no PoE can be connected. PoE does not provide sufficient power for this scenario, and it prevents the camera from drawing power from the auxiliary power source.

Parts included

Quantity	Component
1	MIC fusion 9100s camera
1	RJ coupler
5	Fast wire clips
1	TR20 allen key
1	Safety and security information
1	Quick installation guide
3	Identification label stickers

Technical specifications

Sensor

Sensor type	1/1.8 inch CMOS
Total sensor pixels	4 MP approx.
Effective pixels (H x V)	2,560 x 1,440

Optical

Lens zoom (x)	30x
Digital zoom (x)	16x
Lens aperture (/F)	F1.5 - F4.8
Lens focal length (mm)	6.6 mm – 198 mm
Horizontal field of view (°)	58.5° – 2.1°
Zoom/focus control	Motorized
Iris control	Automatic (with manual override)

PTZ Functions

Drive Unit	Brushless, integral pan/tilt motor drive
Supported mounting orientation	Upright Inverted
Pan Range	360° continuous rotation
Tilt Angle	305°
Tilt Range	Upright unit: -60° to +90° Inverted unit: -90° to +60°
Variable Pan Speed	0.2°/s to 140°/s
Variable Tilt Speed	0.2°/s to 140°/s
Intelligent Tracking Speed	4°/s to 140°/s
Pre-position Accuracy	0.05° (typical)
Guard tours	Custom Recorded Tours - two (2), total duration 30 minutes: Pre-position tour - one (1), consisting of up to 256 scenes consecutively, and one (1) customized with up to 256 user-defined scenes
Number of pre-positions	256
Audible Noise	<65 dB
Other functions	Snap to zoom

Sensitivity

Color (lx) (sensitivity measured according to IEC 62676 Part 5)	0.0168 lx
Monochrome (lx) (sensitivity measured according to IEC 62676 Part 5)	0.0017 lx

With IR accessory	0.0 lx

Thermal sensor

Sensor type	Uncooled microbolometer / VOx (vanadium oxide)
Spectral response (µm)	8 µm – 14 µm
Effective pixels (H x V)	640 x 480
Pixel pitch (µm)	12 µm
Frequency (Hz)	30 Hz

Thermal sensitivity

Sensitivity (NETD)	< 30 mK at 25 °C

Thermal lens

Lens focal length (mm)	14 mm
Lens aperture (/F)	F0.8
Focus	Fixed focus, athermalized
Minimum focus distance (m)	10.0 m
Horizontal field of view (°)	31°
Vertical field of view (°)	23°

Dynamic range

WDR technology	HDR X
High Dynamic Range (HDR) (dB)	133 dB

Video streaming

Sensor mode	25 fps, HDR X 30 fps, HDR X 50 fps, single exposure 60 fps, single exposure
Resolution	2560 x 1440; 1920 x 1080; 1280 x 720; 960 x 544; 640 x 360; 480 x 272
Video compression	H.264 (ISO/IEC 14496-10); M-JPEG; H.265/HEVC
Streaming	Multiple configurable streams in H.265; H.264 and M-JPEG; Configurable framerate and bandwidth; Intelligent Streaming
Frame rate (fps)	1 fps – 60 fps
Camera processing latency	<67ms
GOP structure	IP; IBP; IBBP

Video functions

Image stabilization	Electronic
Day/night modes	Auto (adjustable switch points); Color; Monochrome
Gain control	AGC; Fixed; Region per pre-position
Camera functionality	Intelligent defog; Pixel counter
Backlight compensation	On/Off; Intelligent Auto Exposure (IAE)
White balance (K)	2,000 K – 10,000 K
Number of privacy masks	32
Privacy masks pattern	Black; White; Gray; Auto color; Mosaic; 16M color; 10 blurred levels
Shutter modes	Automatic Electronic Shutter (AES); 1/1 min; 1/30,000 max
Scene modes	Standard; Vibrant; Fast movement; Sensitivity boost; Color only; Illuminator; Custom modes #1, #2
Display stamping	Name; Logo; Date/time; Alarm message
Number of sectors	4, 6, 8, 9, 12, or 16 user selectable, independent sectors
Virtual masks	24 individually configurable virtual masks to hide parts of the scene (background motion such as moving trees, pulsating lights, busy roads, etc.)

Video content analysis

Analysis type	IVA Pro Buildings; IVA Pro Perimeter Licenses run on both channels.
Supported analytics (license)	On optical imager: IVA Pro Traffic; IVA Pro Intelligent Tracking; IVA Pro Visual Gun Detection; IVA Pro PPE; IVA Pro Appearance On thermal imager: IVA Pro Traffic; IVA Pro Intelligent Tracking
GenAI+	Yes (available in Q4 2026)
Alarm triggers	Any object; Object in field; Line crossing; Enter / leave field; Loitering; Follow route; Idle / removed object; Occupancy; Objects stopping or starting to move
Geolocation	Tracking of object locations

Object filters	Duration; Size; Aspect ratio; Speed; Direction; Color
Object classes	Person; Bike; Car; Truck
Calibration	Map-based; 3D Autocalibration; Measurement-based
Additional functionalities	Intelligent tracking; Detect moving objects during PTZ; Tamper detection
Tracking modes	Base tracking (2D); Perimeter tracking (2D); Perimeter tracking (3D); People tracking (3D); Museum mode (2D); Ship tracking (2D); Traffic tracking (2D); Traffic tracking (3D)

Storage

Internal storage	5-s-pre-alarm-recording
Memory card slot	Dual micro SDHC; Dual micro SDXC; Dual micro SD card up to 2 TB
Dual micro SD-card slot configurations	Mirror (redundant storage); Failover (extended service interval); Extend (maximum retention time); Automatic Network Replenishment

Inputs and outputs

Ethernet	Shielded RJ45
Data port	RS485 output for washer pump control
Audio	Available through AMN-P15-SIP accessory *Requires future FW release
Illuminator (sold separately)	IR (850nm & 940nm) and white light - 24VAC or 36VDC non-LPS power supply required

Network

Protocols / standards	IPv4; IPv6; UDP; TCP; HTTP; HTTPS; RTP/RTCP; IGMP V2/V3; ICMP; ICMPv6; RTSP; FTP; ARP; DHCP; APIPA (Auto-IP, link local address); NTP (SNTP); SNMP (V1, MIBII); SNMP (V3, MIBII); 802.1x, EAP/TLS; DNS; DNSv6; DDNS (DynDNS.org, selfHOST.de, no-ip.com); SMTP; iSCSI; UPnP (SSDP); DiffServ (QoS); LLDP; SOAP; Digest authentication; RTP; RTSPS; MQTT; SRTP; HTTP/HTTPS; HSTST; DDNS (DynDNS.org); MQTTS; Syslog
Ethernet type	10/100/1000BASE-T; Auto-sensing; Full / half duplex
Conformity	ONVIF Profile S; ONVIF Profile G; ONVIF Profile T; ONVIF Profile M
Cloud services	Stratocast Genetec; Remote Portal
Integration tools	RCP+, HTTP/CGI, NTCIP (licensed only)

Platform

Common Product Platform	CPP16
Memory (MB)	8192 MB RAM, 16384 MB Flash

Data security

Cryptographic coprocessor (SE)	RSA 4096 bit; 512-bit ECC elliptic curves; AES/CBC 256 bit
Public Key Infrastructure (PKI)	X.509 certificates; SCEP; Device identity certificate (Root CA); Embedded firewall
Encryption	TLS 1.2; AES 256; AES 128; TLS 1.3
Network authentication	802.1x; EAP/TLS; CHAP; Digest authentication; Configurable session timeout
Local storage encryption	AES-XTS
Signed video framework	MD5; SHA-1; SHA-256; Checksum
Firmware protection	Signed firmware; Secure boot; Software sealing; SBOM (Software Bill of Materials); Cloud firmware check
Certified security standards	Common Criteria EAL6+ (Secure Element 3.0); FIPS 140-3 Level 3 (Secure Element 3.0)

Electrical

PoE input	PoE IEEE 802.3bt, Type 4, Class 8 PoE and auxiliary power can be connected simultaneously for redundant operation
Input voltage (VAC)	24 VAC
Input voltage (VDC)	36 VDC
Power consumption PoE (W) (typical – maximum)	21 W – 71.3 W
Power consumption VAC (W) (typical – maximum)	21 W – 108 W
Power consumption VAC (W) (maximum) with illuminator	134 W
Power consumption VDC (W) (typical – maximum)	21 W – 91 W
Power consumption VDC (W) (maximum) with illuminator	124 W

Surge protection	Built-in surge protection for power, data, and network interfaces

Mechanical

Color (RAL)	RAL 9005 Jet black
Dimensions (H x W x D) (mm)	414.34 mm x 307.94 mm x 194.51 mm
Dimensions (H x W x D) (in)	16.3 in x 12.1 in x 7.7 in
Weight (kg)	9.6 kg
Weight (lb)	21.2 lb
Window wiper	Integrated, long-life silicone wiper
Defroster	Embedded in optical and thermal windows, with de-icing capability
Window material	Borosilicate glass (optical); Germanium (thermal)

Environmental

Operating temperature (°C)	-40 °C – 65 °C; Up to 74°C according to NEMA TS 2-2021, sections 2.2.7., 2.2.8., and 2.2.2.9. using fig. 2.1 test profile
Operating temperature (°F)	-40 °F – 149 °F; Up to 165°F according to NEMA TS 2-2021, sections 2.2.7., 2.2.8., and 2.2.2.9. using fig. 2.1 test profile
Cold start temperature (°C)	-40 °C
Cold start temperature (°F)	-40 °F
Storage temperature (°C)	-45 °C – 70 °C
Storage temperature (°F)	-49 °F – 158 °F
Operating relative humidity, non-condensing (%)	5% – 93%
Operating relative humidity, condensing (%)	5% – 100%
Wind load	Camera will hold its position in gusts up to 354 km/h (220 mph)
IP rating	IP66; IP67 (moisture and dust) with IP67 connector kit; IP68/type 6P with MIC DCA, SCA or MIC Wall Mount
Degree of protection	UL type 6P
Impact protection	IK10
Country of origin	Portugal
Country of origin (thermal technology)	Canada

Ordering information

MIC-9803S-Z30B14V PTZ thermal VGA 31° 4MP 30x bl GenAI+
Rugged PTZ camera, metadata fusion bispectral imaging, 4MP 30x, VGA 14 mm, IVA Pro Buildings, IVA Pro Perimeter, IP66/IP67, black
Order number **MIC-9803S-Z30B14V**

Accessories

NPD-9001-E Midspan, bt, 90W, IP67
Outdoor midspan with Power-over-Ethernet for use with PoE-enabled cameras; 90 W, single-port
Order number **NPD-9001-E**

NPD-9001-EBT Midspan, bt, 90W, IP67, TAA
Outdoor midspan with Power-over-Ethernet for use with PoE-enabled cameras; 90 W, single-port
TAA compliant
Order number **NPD-9001-EBT**

MIC-ALM-WAS-24 Interface box, alarm, washer pump, 24VAC
Grey polycarbonate interface box for alarms and washer pump connections for MIC IP cameras
Order number **MIC-ALM-WAS-24**

MIC-DCA-HB Deep conduit mount, M25 holes, black
DCA mount for MIC cameras. Aluminum. Two M25 holes for conduit/cable glands.
Black (RAL 9005) color.
Order number **MIC-DCA-HB**

MIC-DCA-HBA Deep conduit mount, M25 holes, black
DCA mount for MIC cameras. Aluminum. Two M25 holes for conduit/cable glands. Includes an conduit adapter (male M25 to female 3/4" NPT). Available in specific regions only.
Black (RAL 9005) color.
Order number **MIC-DCA-HBA**

MIC-WMB-BD Wall mount bracket , black
Wall mount bracket, black sand finish (RAL9005)
Order number **MIC-WMB-BD**

MIC-PMB Pole mount bracket
Pole mount bracket (includes 2 x 455 mm stainless steel banding straps for pole diameters 75 to 145 mm)
Order number **MIC-PMB**

MIC-CMB-BD Corner mount bracket, black
Corner mount bracket, black sand finish (RAL9005)
Order number **MIC-CMB-BD**

MIC-SPR-BD Wall mount spreader plate, black sand
Aluminum spreader plate suitable for brickwork surface mounting, black sand finish (RAL9005)
Order number **MIC-SPR-BD**

MIC-SCA-BD Shallow conduit adapter, black sand
Shallow conduit adapter for a MIC-WMB, a MIC-PMB, or a MIC-SPR, black sand finish (RAL9005)
Order number **MIC-SCA-BD**

MIC-M25XNPT34 Adapter, M25 to 3/4"NPT, stainless steel
Stainless Steel M25 to ¾" NPT thread adapter
Order number **MIC-M25XNPT34**

MIC-9100-SC Sun cover for MIC 9100s, white
Sunshield kit for MIC fusion 9100s cameras, white color. Recommended for use with white color MIC fusion 9100s cameras installed in locations with high sun load.
Order number **MIC-9100-SC**

MIC-IP67-5PK Connector kit, IP67, 5pcs
5-pack weather protection kit for MIC cameras. Provides an IP67-rated barrier against dust or moisture. Recommended when MIC camera is mounted directly to installation surface (instead of onto a MIC-DCA or MIC wall mount).
Order number **MIC-IP67-5PK**

MIC-WKT-IR Washer kit, MIC IR
Washer kit for MIC camera models
Order number **MIC-WKT-IR**

MIC-ILB-400 Illuminator, white-IR light, black
Illuminator accessory for MIC IP cameras, IR Light (850 nm/940 nm) + White light LEDs
Black (RAL 9005). Sand finish.
Order number **MIC-ILB-400**

AMN-P15-SIP Amplifier module 15W, SIP
IP Amplifier module 15 W, Integrated class D amplifier, DSP
Order number **AMN-P15-SIP | F.01U.389.866**

LHN-UC15L-SIP Horn loudspeaker 15W, long throw, SIP
IP Horn loudspeaker 15 W, long throw, Integrated class D amplifier, DSP and microphone.
Order number **LHN-UC15L-SIP | F.01U.389.835**

LHN-UC15W-SIP Horn loudspeaker 15W, wide angle, SIP
IP Horn loudspeaker 15 W, wide angle, Integrated class D amplifier, DSP and microphone.
Order number **LHN-UC15W-SIP | F.01U.389.865**

XDR-240E-36 PSU, 36VDC, 240W
PSU, 36VDC, 240W
Order number **XDR-240E-36 | Z.01X.002.077**

Software Options

MVS-FCOM-PRCL License key for serial protocol
Serial Protocol Software License (e-license) for IP Cameras
Order number **MVS-FCOM-PRCL**

MVC-IVA-TRA IVA Pro Traffic
Video analytics software based on deep neural network technology for traffic monitoring and Automatic Incident Detection.
Order number **MVC-IVA-TRA**

MVC-IVA-IT IVA Pro Intelligent Tracking
AI-based Intelligent Tracking and video analytics while the camera is moving for applications in crowds and traffic scenes.
Order number **MVC-IVA-IT**

MVC-IVA-VGD IVA Pro Visual Gun Detection
Video analytics software based on deep neural network technology, designed to detect upright persons and brandished guns.
Order number **MVC-IVA-VGD**

MVC-IVA-PPE IVA Pro PPE
Video analytics software based on deep neural network technology for detecting personal protective equipment.
Order number **MVC-IVA-PPE**

MVC-IVA-APC IVA Pro Appearance
Video analytics software based on deep neural network technology for detailed person appearance attributes allowing advanced forensic search.
Order number **MVC-IVA-APC**

Services

EWE-MIC9IFF-IW 12 mths full wrty ext MIC 9000i Fusion
12 months warranty extension
Order number **EWE-MIC9IFF-IW**

https://www.iqsight.com

© IQSIGHT 2026