1 |

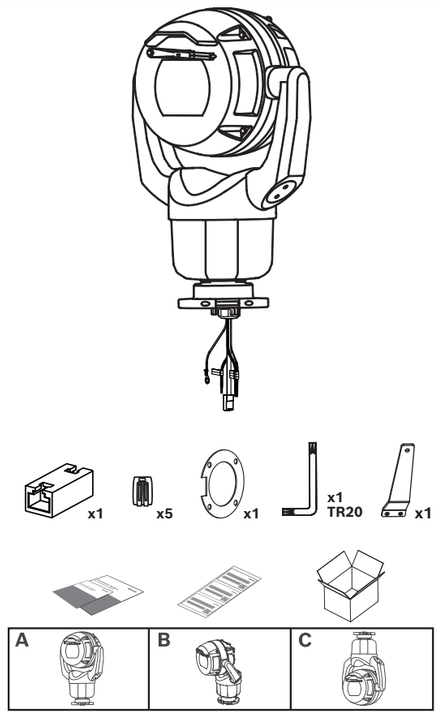

2 |

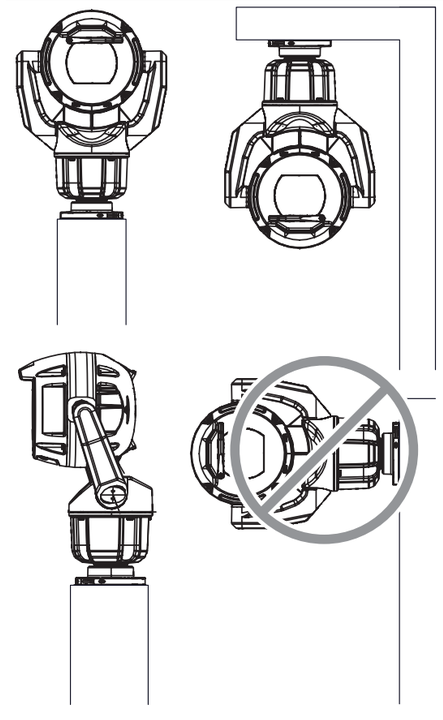

3 |

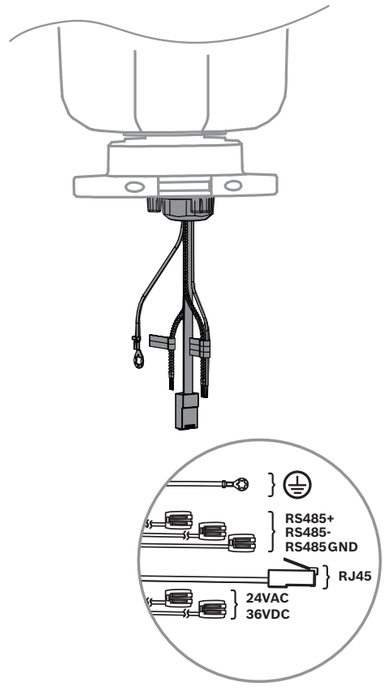

4 |

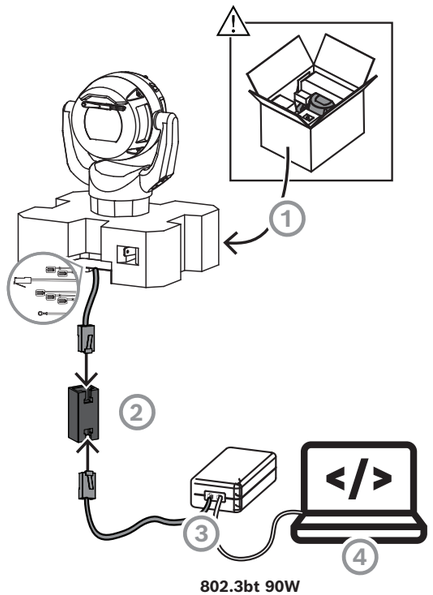

5 |

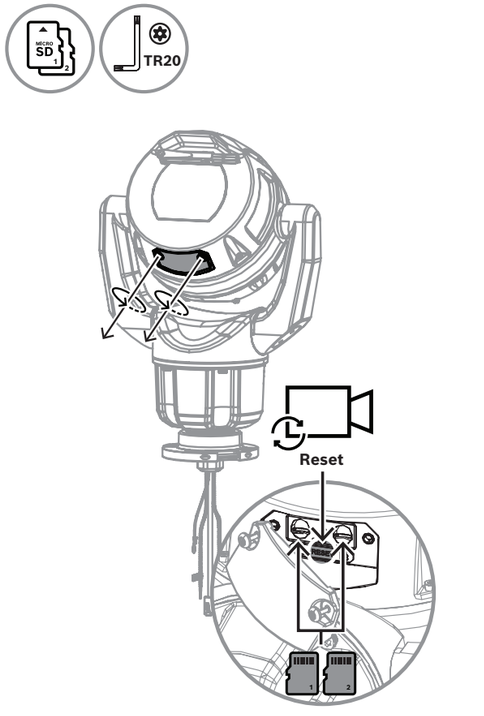

6 |

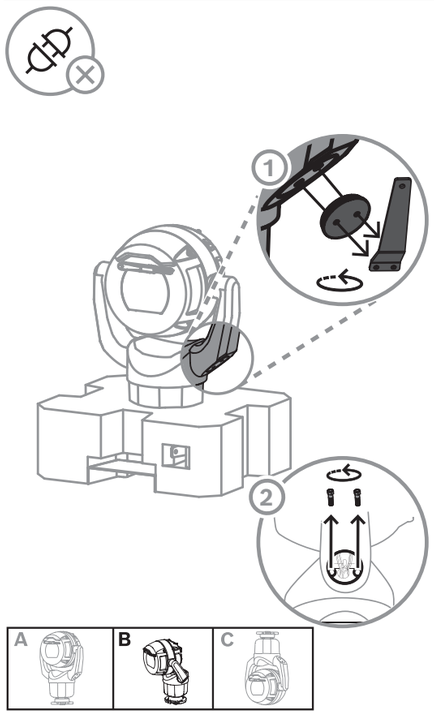

7 |

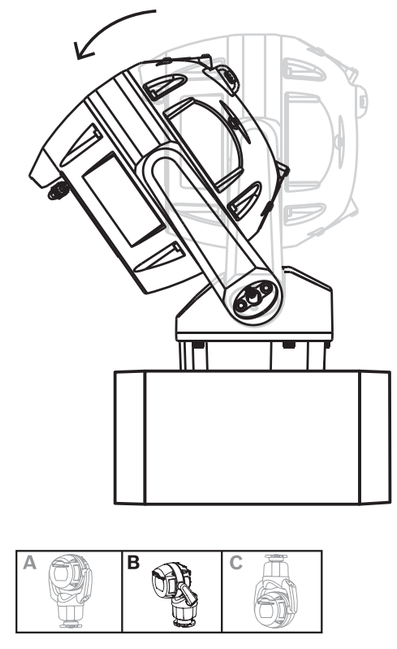

8 |

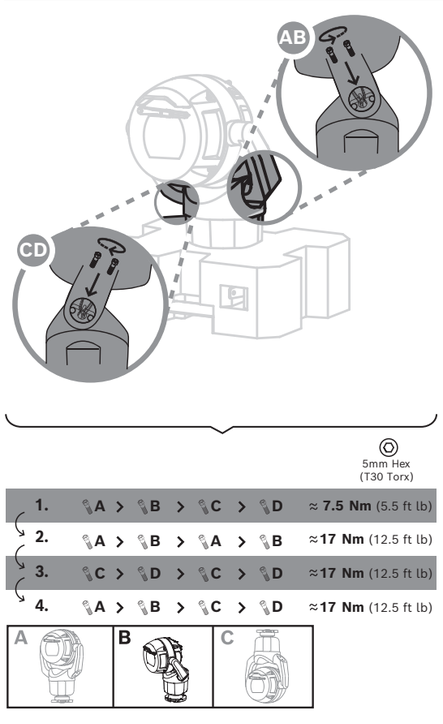

9 |

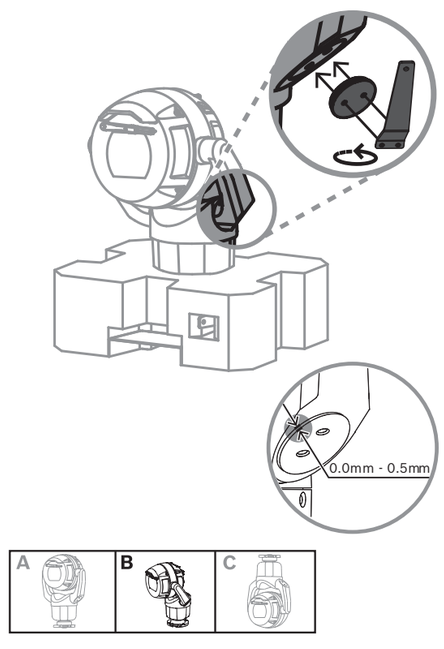

10 |

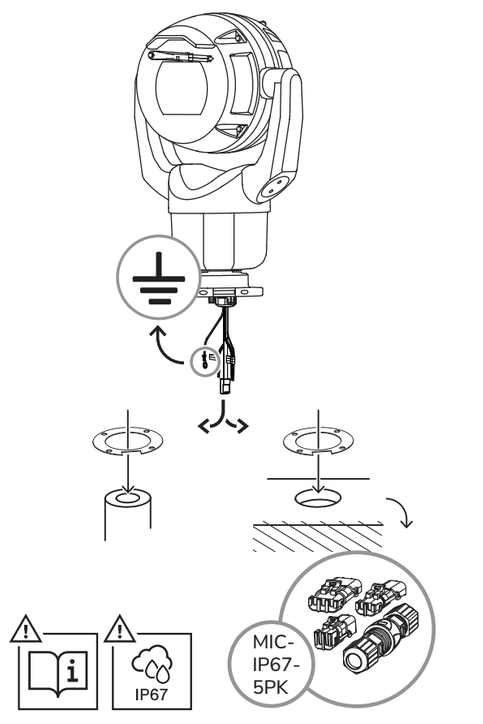

11 |

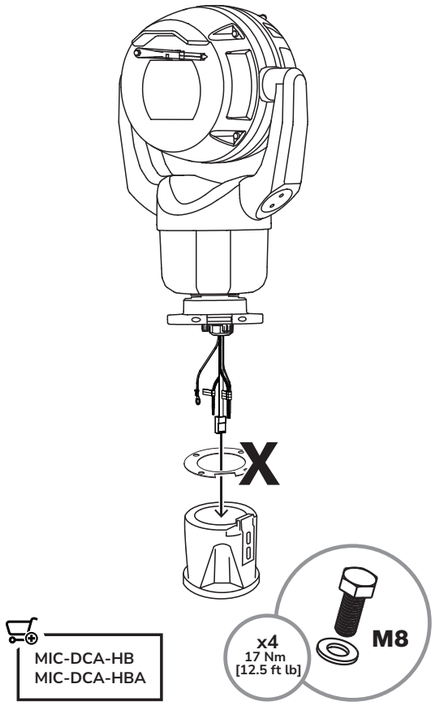

12 |

Project Assistant app

Windows | iOS | Android

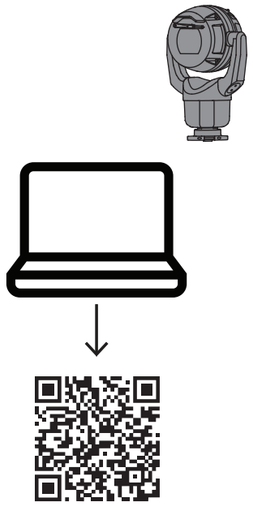

https://downloadstore.keenfinity-group.com/

13 |

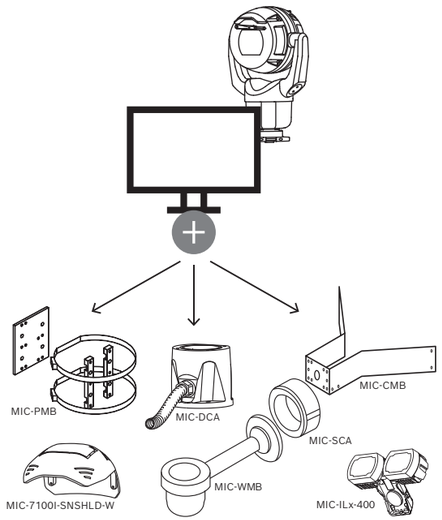

MIC 7100s

MIC-7803S-Z30B | MIC-7803S-Z30G |
MIC-7803S-Z30W | MIC-7803S-Z30BR |
MIC-7803S-Z30GR | MIC-7803S-Z30WR

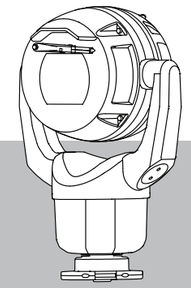

en Quick installation guide

IQSIGHT B.V.
Achtseweg Zuid 173
5651 GW Eindhoven
The Netherlands
www.iqsight.com
© IQSIGHT 2026

2026-06 | V01 | Z.01X.008.937 | 202606161210